Data sheet
SWING



Technical data		
Nominal heat output	[kW]	8
Partial heat output	[kW]	4
Fresh air demand	[m³/h]	21
Room heating capacity (depending on house insulation)	[m³]	90 - 210
Fuel consumption	[kg/h]	1,1 - 2,2
Efficiency	[%]	81,9
Energy efficiency class		A+
Chimney draft requirement	[Pa]	12

Characteristics

Balanced flue

RLS system

Energy efficiency

Accessories

Fresh air floor connection

RIKA®

Dimensions, weight and connection

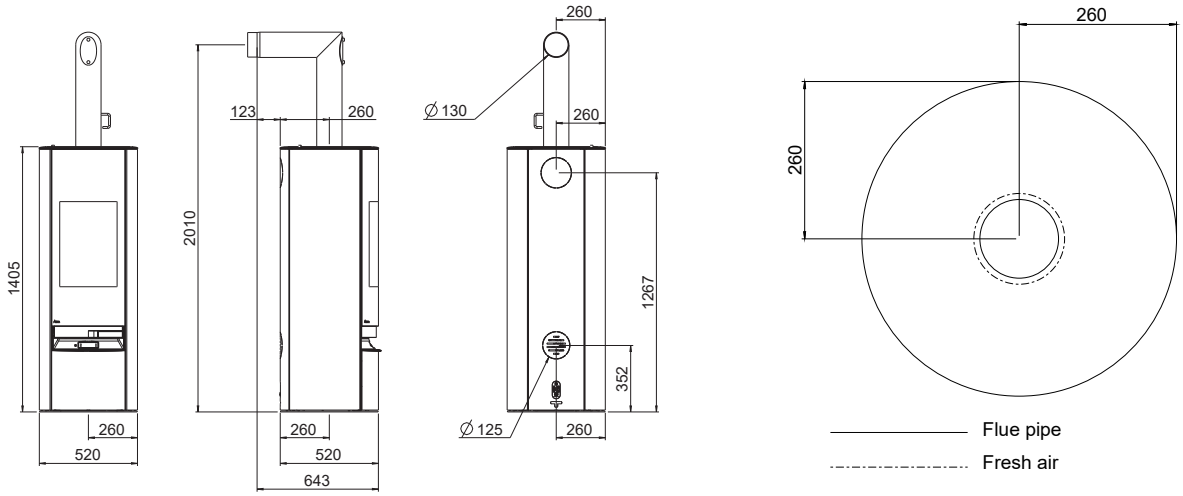

Dimensions		
Height	[mm]	1405
Height with rotary disc	[mm]	1435
Width	[mm]	520
Corpus depth	[mm]	520
Firing chamber [WxHxD]	[mm]	350x430x270
Weight		
Weight with steelshell	[kg]	~175
Weight complete with rotary disc	[kg]	~180
Flue pipe connection		
Flue pipe outlet	[mm]	130
Original angle pipe connection height	[mm]	2010
Connection height with rotary disk	[mm]	2035
Original angle pipe total depth	[mm]	643
Original angle pipe distance to rear wall	[mm]	123
Deapth from rear wall to middle of flue pipe	[mm]	260
Original angle pipe side distance	[mm]	260
Rear connection height	[mm]	1267*
Rear connection side distance	[cm]	260*
Fresh air connection (not available with the rotary disc)		
Diameter	[mm]	125
Connection height	[mm]	352
Side distance	[mm]	260
Floor connection side distance	[mm]	260*
Floor connection depth	[mm]	260*

* not available with the rotary disc

Safety distances

Note
1. To non-combustible objects
a > 40 cm b > 10 cm
2. To combustible objects and reinforced concrete load-bearing walls
a > 80 cm b > 15 cm

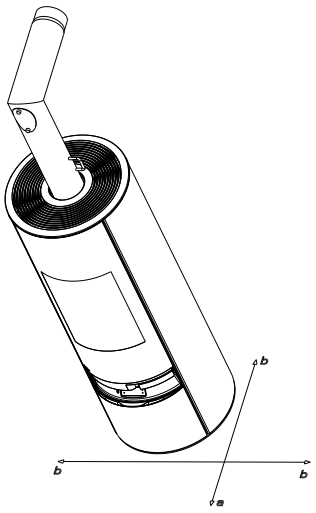

In case of doubt as well as missing or incorrect translations, the German version is the only valid one. Subject to technical and visual changes as well as layout and printing errors..

© 2022 | RIKA Innovative Ofentechnik GmbH