Data sheet

SOL



Technical data		
Nominal heat output	[kW]	8
Partial heat output	[kW]	4
Fresh air demand	[m³/h]	21
Room heating capacity (depending on house insulation)	[m³]	90 - 210
Fuel consumption	[kg/h]	1,1 - 2,2
Efficiency	[%]	83,2
Energy efficiency class		A+
Chimney draft requirement	[Pa]	12

Characteristics



Balanced flue



RLS system



Energy efficiency

Dimensions, weight and connection

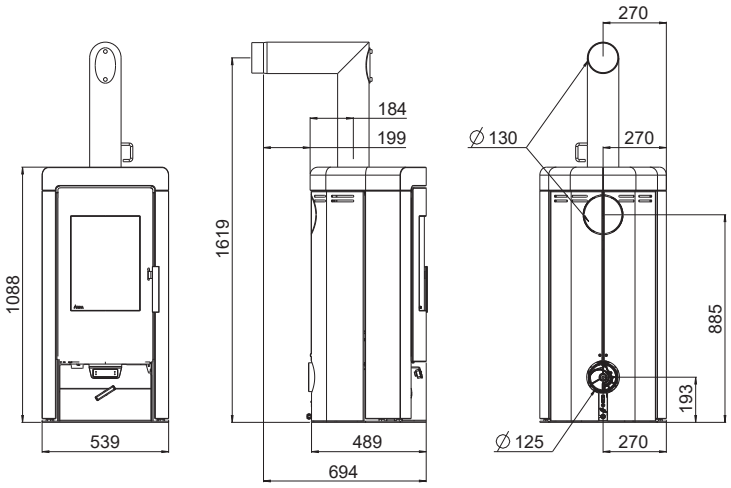

Dimensions		
Height	[mm]	1088
Width	[mm]	539
Corpus depth	[mm]	489
Firing chamber [WxHxD]	[mm]	320x380x280
Weight		
Weight without stones	[kg]	~120
Weight with stones	[kg]	~195
Thermal mass	[kg]	~90
Flue pipe connection		
Flue pipe outlet	[mm]	130
Original angle pipe connection height	[mm]	1619
Original angle pipe total depth	[mm]	694
Original angle pipe distance to rear wall	[mm]	199
Deapth from rear wall to middle of flue pipe	[mm]	184
Original angle pipe side distance	[mm]	270
Rear connection height	[mm]	885
Rear connection side distance	[mm]	270
Fresh air connection		
Diameter	[mm]	125
Connection height	[mm]	193
Side distance	[mm]	270

Safety distances

Note
1. To non-combustible objects
a > 40 cm b > 10 cm
2. To combustible objects and reinforced concrete load-bearing walls
a > 80 cm b > 20 cm

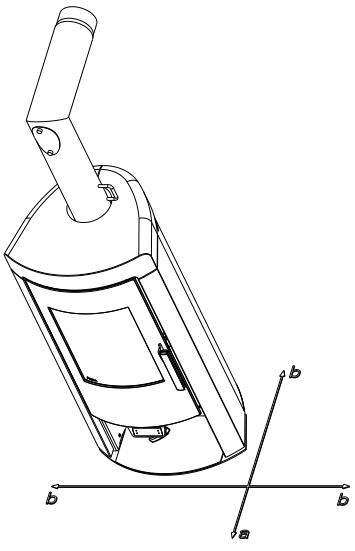

In case of doubt as well as missing or incorrect translations, the German version is the only valid one. Subject to technical and visual changes as well as layout and printing errors..
© 2022 | RIKA Innovative Ofentechnik GmbH