Data sheet

CONNECT PELLET EDGE



Technical data		
Heating power range	[kW]	2,5 - 8
Nominal heat output	[kW]	8
Fresh air demand	[m³/h]	18
Room heating capacity (depending on house insulation)	[m³]	50 - 220
Fuel consumption	[kg/h]	0,6 - 1,9
Pellet container capacity E26*	[l/kg]	40/~26
Pellet container capacity E40*	[l/kg]	61/~40
Electric supply	[V]/[Hz]	230/50
Average electrical input	[W]	~20
Fuse	[A]	2,5 AT
Efficiency	[%]	>90
Energy efficiency class		A+
Chimney draft requirement	[Pa]	3

*The capacity in kg may deviate due to different pellet bulk densities.

Characteristics

RAO — Optional

D — Balanced flue

Touch display

Tipping grate ash removal

A+ — Energy efficiency

DAR — Dynamic Air Regulation

Quiet

Accessories

RIKA FIRENET

RIKA VOICE

Room sensor

RIKA®

Dimensions, weight and connection

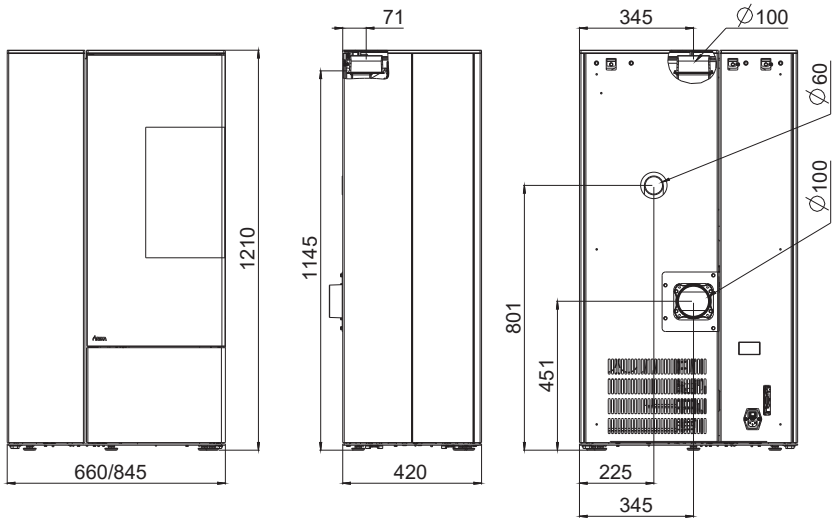

Dimensions		
Height	[mm]	1210
Width E26/E40	[mm]	660/845
Depth	[mm]	420
Firing chamber [WxHxD]	[mm]	240x490x240
Weight		
Weight E26/E40	[kg]	168/183
Flue pipe connection		
Flue Pipe Outlet	[mm]	100
Rear Connection Height	[mm]	451
Rear Connection - side Distance	[mm]	345
Top connection Height	[mm]	1145
Top connection - Distance to rear wall	[mm]	71
Top connection - side Distance	[mm]	345
Fresh air connection		
Diameter	[mm]	60
Connection height	[mm]	801
Side distance	[mm]	225

Safety distances

Note
1. To non-combustible objects
a > 40 cm b > 7 cm
2. To combustible objects and reinforced concrete load-bearing walls
a > 80 cm b > 7 cm

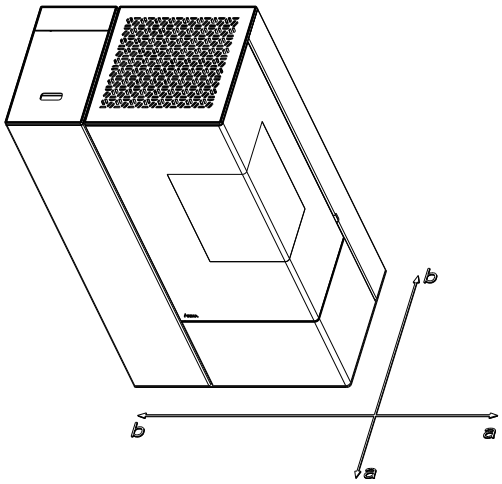

In case of doubt as well as missing or incorrect translations, the German version is the only valid one.
Subject to technical and visual changes as well as layout and printing errors..
© 2022 | RIKA Innovative Ofentechnik GmbH