Data sheet
BACK



Technical data		
Nominal heat output	[kW]	8
Partial heat output	[kW]	4
Fresh air demand	[m³/h]	21
Room heating capacity (depending on house insulation)	[m³]	90 - 210
Fuel consumption	[kg/h]	1,1 - 2,2
Efficiency	[%]	83,9
Energy efficiency class		A+
Chimney draft requirement	[Pa]	12

Characteristics

Baking compartment

Balanced flue

RLS system

Energy efficiency

Accessories

Fresh air floor connection

RIKA®

Dimensions, weight and connection

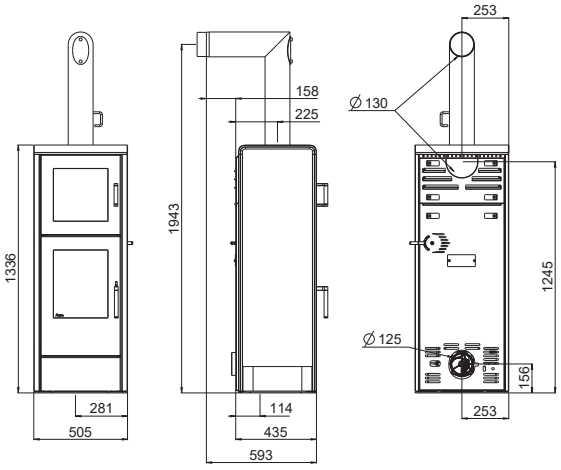

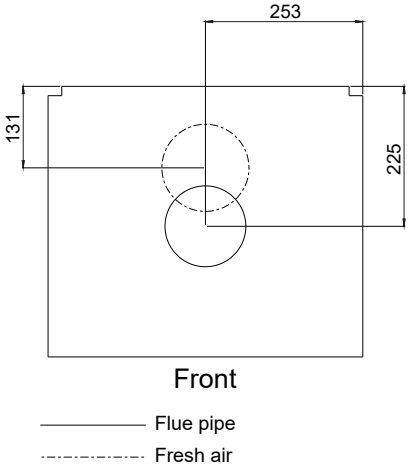

Dimensions		
Height	[mm]	1336
Width	[mm]	505
Corpus depth	[mm]	435
Firing chamber [WxHxD]	[mm]	340x300x350
Weight		
Weight with steelpanel or ceramic decor	[kg]	~180
Flue pipe connection		
Flue pipe outlet	[mm]	130
Original angle pipe connection height	[mm]	1943
Original angle pipe total depth	[mm]	593
ROOriginal angle pipe distance to rear wall	[mm]	158
Deapth from rear wall to middle of flue pipe	[mm]	225
Original angle pipe side distance	[mm]	253
Rear connection height	[mm]	1245
Rear connection side distance	[mm]	253
Fresh air connection		
Diameter	[mm]	125
Connection height	[mm]	156
Side distance	[mm]	253
Floor connection side distance	[mm]	253
Floor connection depth	[mm]	114
Oven		
Height	[mm]	300
Width	[mm]	330
Depth	[mm]	340
Slide-in width of baking tray	[mm]	308
Depth of baking tray	[mm]	336
Slide-in width of cooking grate	[mm]	316
Depth of cooking grate	[mm]	302

Safety distances

Note
1. To non-combustible objects
a > 40 cm b > 10 cm
2. To combustible objects and reinforced concrete load-bearing walls
a > 80 cm b > 10 cm

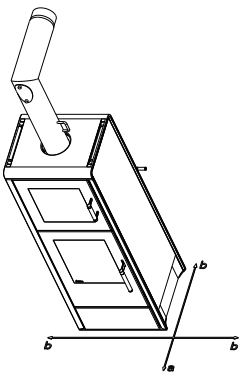

In case of doubt as well as missing or incorrect translations, the German version is the only valid one. Subject to technical and visual changes as well as layout and printing errors..

© 2022 | RIKA Innovative Ofentechnik GmbH